SM 1x2 Mechanical Fiber Optic Switch

Features

- Low Insertion Loss and PDL
- Comply with RoHS
- Comply with GR-1221 and GR-1073

Applications

- Telecommunications
- FTTH, CATV, LAN

Non-Latching Type SPECIFICATIONS

OPERATING WAVELENGTH	L Band, C+L Band, S+C+L Band and O+S+C+L Band		
PARAMETERS	SPECIFICATION	PARAMETERS	SPECIFICATION
Insertion Loss (Typical)	≦1.0dB(0.7)	Durability	≧10 million cycles
Return Loss (Typical)	≧50dB(60)	Optical Input Power	500mW
PDL (Typical)	≦0.15dB(0.05)	Power Supply	5VDC
Repeatability (Typical)	±0.05dB(0.02)	Operating Current	20mA
Crosstalk (Typical)	≧50dB(60)	Operating Temperature	0~70℃
WDL (Typical)	≦0.3dB(0.15)	Storage Temperature	-40~85℃
TDL (Typical)	≦0.3dB(0.15)	Switching Time (Typical)	≦10ms (4)
Dimensions	46*13.4*11 mm		

W S C 2 ☐ 0 1 2 2 2 ☐ ☐ ☐ 3

Wavelength
1=1550
2=1310
3=1310/1550
6=O Band
7=C Band
8=L Band
9=C+L Band
A=S+C+L Band
B=O~L Band
X=others

Control Type
1=latching
2=non-latching

Terminal Type
2=pin

Fiber Type
0=0.25mm
1=0.9mm
X=others

Fiber Length
1=1m
2=2m
3=3m
.....
X=others

Connector Type
0=None
F=FC/PC
S=SC/PC
T=ST/PC
L=LC/PC
M=MU/PC
E=E2000/PC
A=FC/APC
B=SC/APC
C=LC/APC
D=E2000/APC
X=others

Dimensions (mm)
3=46*13.4*11
X=others

WANSHING OPTICAL CO., LTD
3F No.53, Sec 2, Jhonghua Rd., Sinjhuang City,
Taipei County 24246, TAIWAN, R.O.C.
HOMEPAGE: http: www.wanshing.com.tw e-mail: info@wanshing.com.tw

Dimension

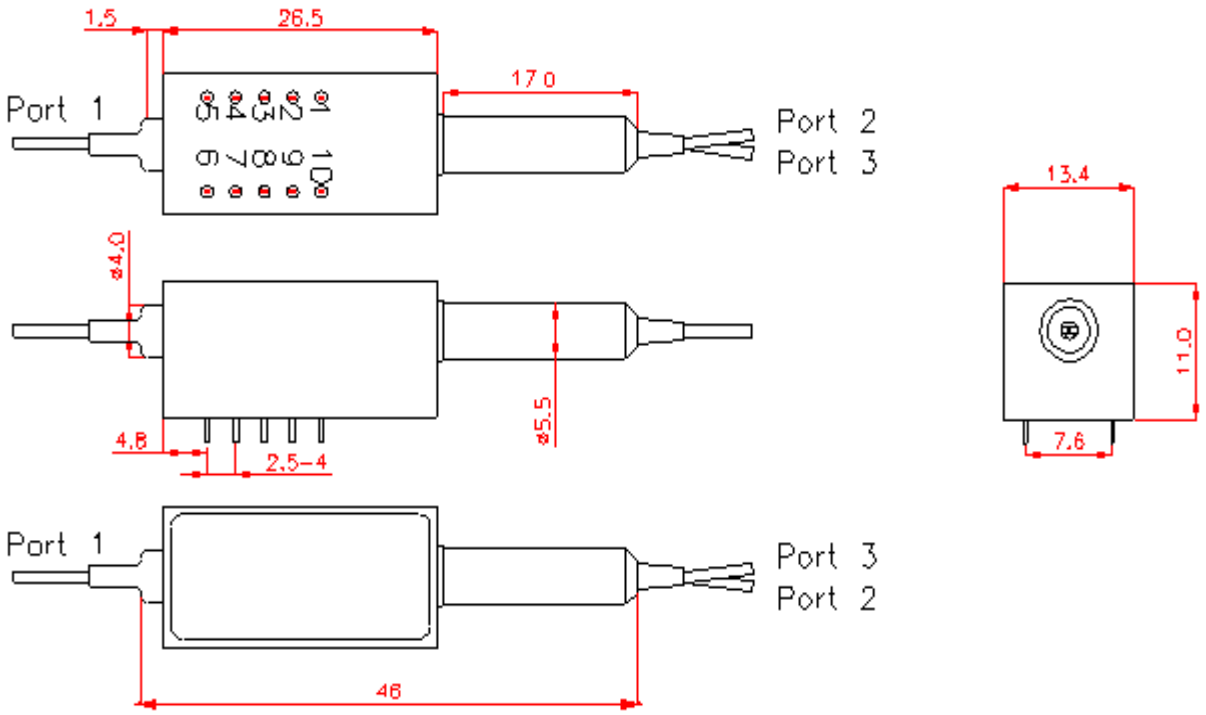

Electrical Pin Configuration

Optical Path	Electrical Drive		Status Sensor					
	Pin1	Pin10	Pin5	Pin6	Pin2-3	Pin3-4	Pin7-8	Pin8-9
1-2	N/A	N/A	N/A	N/A	close	open	open	close
1-3	GND	+V Pulse	N/A	N/A	open	close	close	open