WANSHING OPTICAL Co.,Ltd.

LASER LAB CENTER LLC

WOLLC RoF-XGHz-1550-SM-RH-EHDM
Radio over Fiber up to 12 GHz 1550 nm analog system RadHard

Extra Heavy Duty Modules (EHDM)

• Radar & Telecom

• Military & Aerospace

• Airborne

Features

• New tungsten case for extremely hard Rad-hard applications

• High dynamic optical range in hard environment

• Special radiation hard inner&outer cases

• Low phase noise

• High linearity phase-frequency response (PFR)

• Optional automatic overtemperature and overcurrent protection

• Adjustable PD optical power monitoring inner unit optionally

• High output optical power due high temperature

• High dynamic range (SFDR), low intermodulation distortions 2-nd, 3-rd

• Rad-hard: sustains 100 krad in Mil-1019.7 at High & ELDRS low dose rate conditions

• Heavy ions, SEL immune at 50 MeV/cm²/mg LET ions (max)

Description

The **RoF-4GHz-1550-SM-RH-EHDM** is a high performance analog RoF Tx&Rx modules 50 Ohm matched. New hermetic metal packages, it is specifically intended for space and harsh radiation environments. It provides exceptional electrical performances, high speed and high optical power. Input supply ranges of radio signal power from -30 dBm to +20 dBm. QML-V qualified (MIL-PRF-38535). FR in/out SMA male/female (custome)

Ordering Information

Part No.	Description
RoF-12GHz-1550-SM-RH-HDM	DC-12GHz analog RoF Tx&Rx modules
RoF- 8GHz-1550-SM-RH-HDM	DC- 8GHz analog RoF Tx&Rx modules
RoF- 6GHz-1550-SM-RH-HDM	DC- 6GHz analog RoF Tx&Rx modules
RoF- 4GHz-1550-SM-RH-HDM	DC- 4GHz analog RoF Tx&Rx modules

SPECIFICATIONS					
PARAMETERS	CONDITION	UNITS	MIN	TYP	MAX.
Operating RF	HPBW	GHz	0.01	6	12
Gain	3 GHz, G, T=+25 ° C	dB	-22	-20	-19
PFR linearity	P_L ,T=+25 °C	%	1	-	2
Output Third Order Intercept	OIP_3, T=+25°C	dBm	+19	-	+24
Central optical length	T=+25 °C	nm	1530	1550	1570
Output optical power	T=+25 °C	mW	3	-	24
Noise figure	T=+25 °C	dB	4	15	24
Phase noise	1 kHz offset	dBc	138	-	128
Input power at 1 dB compression	1 tone 50 MHz, 50 Ohm	dBm	+18	-	+23
Voltage TX	T=+25 °C	V	1.5	2.3	3
Voltage RX	T=+25 °C	V	5	9	12
Current TX	T=+25 °C	mA	5	80	190
Current RX	T=+25 °C	mA	5	15	55

RoF OPTICAL PERFORMANCE SPECIFICATIONS					
PARAMETERS	CONDITION	UNITS	MIN	TYP	MAX
Fiber optic connectors	FC/APC				
Fiber	Rad Hard Single Mode Fiber				
Optical power in fiber	Reference only	mW	-	-	20
Side mode suppression ratio		dB	40	-	50

ENVIRONMENTAL CONDITIONS					
PARAMETERS	CONDITION	UNITS	MIN	TYP	MAX
Operating temperature	No damage	° C	-50	-	+50
Storage temperature		° C	-70	-	+70
Humidity		95 % relative humidity, noncondensing			
Vibration		19.8 g's rms, 20-5000 CPS, Per MIL-STD-810B, Method 514,Procedure 5			

RoF ABSOLUTE MAXIMUM RAITINGS			
PARAMETERS	CONDITION	UNITS	VALUE
Voltage	No damage	V	3.5
Current		mA	270
Maximum input RF power		dBm	+25
Low Temperature		° C	-60
High Temperature		° C	+60
MTBF	50 % RF power degradation	h	$>10^5$

Safety Information

• The laser light emitted from Tx is invisible and potentially harmful to the human eye. Avoid eye and skin exposure to the beam, both direct and reflected.

• Products are subject to the risks normally associated with sensitive electronic devices including static discharge, transients, and overload. Please ensure ESD protection prior to handling the products.

• These products are not intended for use in systems where product malfunction can reasonably be expected to result in personal injury.

Mechanical Outline Options

TYPICAL Case SIZE L=50mm; W=30 mm; W=20mm

NOTE: dimensions, connector types customizing in ordering list

Type of RF, optical and other connectors (technical parameters) according to user ordering list, fiber optic pigtail available

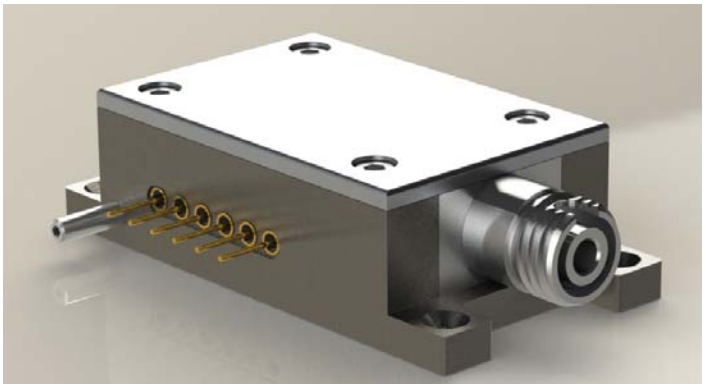

RoF-XGHz-1550-SM-RH-EHDM-TX (TRANSMITTER)

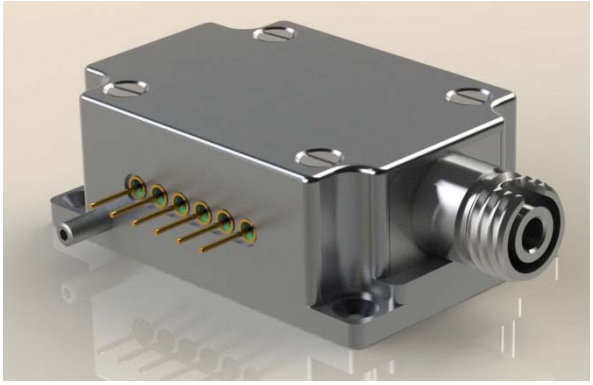

RoF-XGHz-1550-SM-RH-EHDM-RX (RECIEVER)

RoHS Compliance

This part is compliant with 2011/65/EU RoHS directive (Restrictions on the Use of Certain Hazardous Substances in Electrical and Electronic Equipment) as amended by Directive 2015/863/EU.
This product also has the following attributes:

- Lead Free
- Antimony Free
- TBBP-A ($C_{15}H_{12}Br_4O_2$) Free
- SVHC Free
- Halogen Free
- PFOS Free

Important Notice

The information contained in this Data Sheet and any associated documents ("Data Sheet Information") is believed to be reliable; however, Wanshing Optical makes no warranties regarding the Data Sheet Information and assumes no responsibility or liability whatsoever for the use of said information. All Data Sheet Information is subject to change without notice. Customers should obtain and verify the latest relevant Data Sheet Information before placing orders for Wanshing Optical® products. Data Sheet Information or the use thereof does not grant, explicitly, implicitly or otherwise any rights or licenses to any third party with respect to patents or any other intellectual property whether with regard to such Data Sheet Information itself or anything described by such information. DATA SHEET INFORMATION DOES NOT CONSTITUTE A WARRANTY WITH RESPECT TO THE PRODUCTS DESCRIBED HEREIN, AND WE HEREBY DISCLAIMS ANY AND ALL WARRANTIES WITH RESPECT TO SUCH PRODUCTS WHETHER EXPRESS OR IMPLIED BY LAW, COURSE OF DEALING, COURSE OF PERFORMANCE, USAGE OF TRADE OR OTHERWISE, INCLUDING THE IMPLIED WARRANTIES OF MERCHANTABILITY AND FITNESS FOR A PARTICULAR PURPOSE. Without limiting the generality of the foregoing, Wanshing Optical® products are not warranted or authorized for use as critical components in medical, life-saving, or life-sustaining applications, or other applications where a failure would reasonably be expected to cause severe personal injury or death. Applications described in the Data Sheet Information are for illustrative purposes only. Customers are responsible for validating that a particular product described in the Data Sheet Information is suitable for use in a particular application.