FIBER OPTIC TRANSMITTER 10.3125 Gbps
LLC FO Tx 10G

KEY FEATURES/BENEFITS

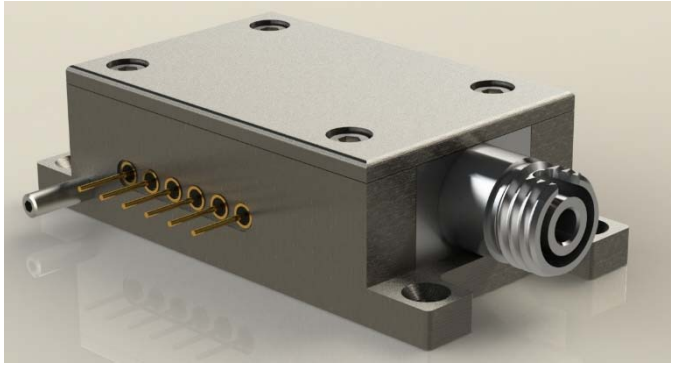

- 1310/1550 nm DFB lasers to support 10.3125 Gbps
- 10 km SMF Links
- High-Speed Electrical plug-in connector eliminates the need for soldering & enables ease of servicing
- Small size
- Wide Operating Temperature Range
- Metal enclosure for lower EMI

APPLICATIONS

- Harsh Environment such as: Airborne, Tactical, Railway, Industrial, Oil and Gas and Shipboard applications

RATINGS AND SPECIFICATIONS

Table 1 Absolute Maximum Ratings

Parameter	Symbol	Min	Max	Units	Notes
Storage Temperature	T_S	- 50	+ 75	°C	
Supply Voltage	V_{CC}	- 0.3	3.8	V	$V_{CC}T$ & $V_{CC}R$ may not differ by more than 0.5V
Relative Humidity	RH	5	98	%	
Optical Receiver Input Average Power			0	dBm	

Table 2 Operating Condition

Parameter	Symbol	Min	Typ.	Max	Units	Notes
Operating Temperature, Case	T_{op}	- 40		+ 85	°C	
Supply Voltage	V_{CC}	3.135	3.3	3.465	V	
Supply Current	I_{CC}		150	250	mA	Typical @ +85°C
Power Supply Noise (Peak-Peak)	V_{CC_RIPPLE}			5	mV	Per SFF-8431 Rev 4.1

Table 3 Electro-Optical Characteristics – Transmitter

Parameter	Symbol	Min	Typ.	Max	Units	Notes
Optical Output Power, Avg	P_{OUT}	0.5	2.5	4.5	dBm	10.3125 Gbps
Optical Output Power - OFF CONDITION	$P_{OUT-OFF}$			- 30	dBm	
Optical Return Loss Tolerance				12	dB	IEEE 802.3ae Clause 52 Compliant
Extinction Ratio	Er	3.5	5		dB	
Optical Wavelength (Type 1)	λ_{OUT}	1280	1310	1340	nm	
Optical Wavelength (Type 2)	λ_{OUT}	1520	1550	1580	nm	
Spectral Width, rms	$\Delta\lambda$			1	nm	
Side Mode Suppression Ratio	SMSR	30		50	dB	
Relative Intensity Noise	RIN	-140	-148	- 155	dB/Hz	
Transmitter Differential Input Impedance	Z_{IN}		100		Ohms	AC coupled internally
Differential Input Voltage	V_{IN_D}	200		2400	mV_{P-P}	CML, 100 ohm

Table 4 Compliance Specifications

Parameter	Symbol	Min	Typ.
Mechanical Shock	MIL-STD-810	Para 516.6, Proc. I, 650g	0.9 ms operating
Mechanical Vibration	MIL-STD-810	Para. 514.6, 40g rms	Random operating
ESD	MIL-STD-883		500V HBM
Flame Resistance	MIL-STD-1344	Method 1012, Cond. B	30 seconds
Damp Heat	MIL-STD-1344	Method 1002.2, Cond. B	10 cycles, 24 hours

ORDERING INFORMATION

Part Number	Connector type	Operating temperature

LLC FO Tx 10G-1-type1	LC/UPC (1310 nm)	-55°C to +60°C
LLC FO Tx 10G-1-type2	LC/UPC (1550 nm)	-55°C to +60°C
LLC FO Tx 10G-2-type1	LC/APC (1310 nm)	-55°C to +60°C
LLC FO Tx 10G-2-type2	LC/APC (1550 nm)	-55°C to +60°C
LLC FO Tx 10G-3-type1	FC/UPC (1310 nm)	-55°C to +60°C
LLC FO Tx 10G-3-type2	FC/UPC (1550 nm)	-55°C to +60°C
LLC FO Tx 10G-4-type1	FC/APC (1310 nm)	-55°C to +60°C
LLC FO Tx 10G-4-type2	FC/APC (1550 nm)	-55°C to +60°C

FUNCTIONAL DESCRIPTION

Figure 1 **Transmitter Block Diagram**

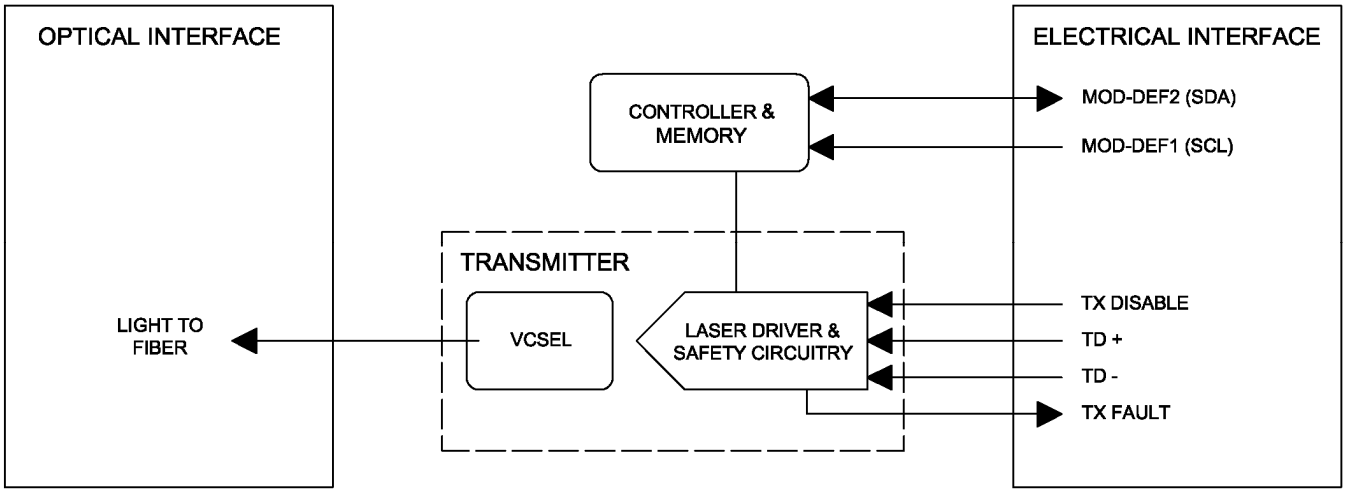
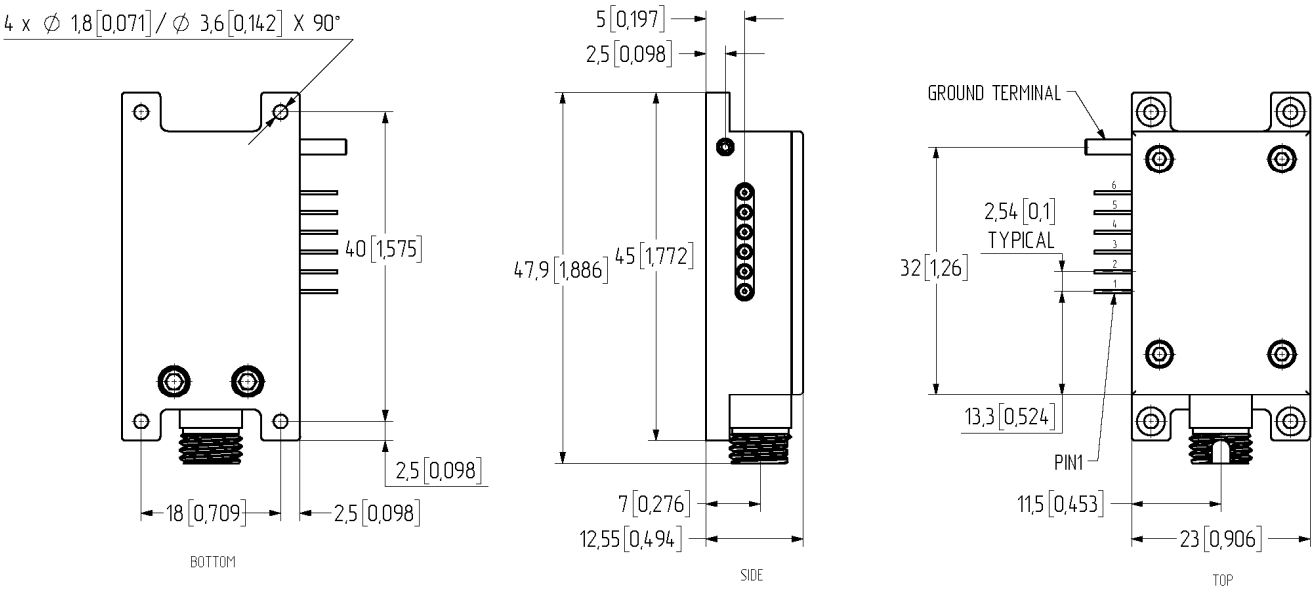
Figure 2 **Transmitter Outline Drawing**