FIBER OPTIC RECEIVER 4.25 Gbps
LLC FO Rx 4G

KEY FEATURES/BENEFITS

- 10 km SMF Links
- Pin PD to support high sensitivity 4.25 Gbps
- High-Speed Electrical plug-in connector eliminates the need for soldering & enables ease of servicing
- Small size
- Wide Operating Temperature Range
- Metal enclosure for lower EMI

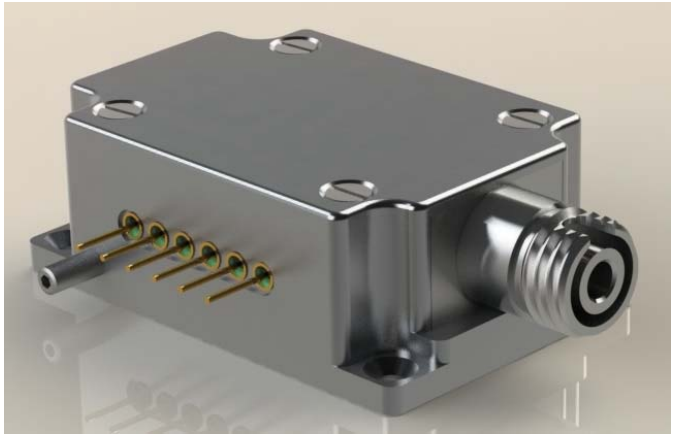

APPLICATIONS

- Harsh Environment such as: Airborne, Tactical, Railway, Industrial, Oil and Gas and Shipboard applications

RATINGS AND SPECIFICATIONS

Table 1 Absolute Maximum Ratings

Parameter	Symbol	Min	Max	Units	Notes
Storage Temperature	T_S	- 50	+ 75	°C	
Supply Voltage	V_{CC}	- 0.3	3.8	V	$V_{CC}T$ & $V_{CC}R$ may not differ by more than 0.5V
Relative Humidity	RH	5	98	%	
Optical Receiver Input Average Power			0	dBm	

Table 2 Operating Condition

Parameter	Symbol	Min	Typ.	Max	Units	Notes
Operating Temperature, Case	T_{op}	- 40		+ 85	°C	
Supply Voltage	V_{CC}	3.135	3.3	3.465	V	
Supply Current	I_{CC}		90	100	mA	Typical @ +85°C
Power Supply Noise (Peak-Peak)	V_{CC_RIPPLE}			5	mV	

Table 4 Electro-Optical Characteristics – Receiver

Parameter	Symbol	Min	Typ.	Max	Units	Notes
Sensitivity, BER 10^{12}, PRBS31, Er 5dB	P_{IN}	- 20	- 19	- 15	dBm	4.25 Gbps
Overload, BER 10^{12}, PRBS31	P_{IN}	+ 3		+5	dBm	
Optical Wavelength	λ_{IN}	1260		1620	nm	
Receiver Differential Output Impedance	R_{OUT}		100		Ohms	AC coupled internally
Differential Output Voltage Swing	V_{OUT_D}	200		1600	mV_{P-P}	CML, 100 ohm

Table 5 Compliance Specifications

Parameter	Symbol	Min	Typ.
Mechanical Shock	MIL-STD-810	Para 516.6, Proc. I, 650g	0.9 ms operating
Mechanical Vibration	MIL-STD-810	Para. 514.6, 40g rms	Random operating
ESD	MIL-STD-883		500V HBM
Flame Resistance	MIL-STD-1344	Method 1012, Cond. B	30 seconds
Damp Heat	MIL-STD-1344	Method 1002.2, Cond. B	10 cycles, 24 hours

ORDERING INFORMATION

Part Number	Connector type	Operating temperature
LLC FO Rx 4G-1	LC/UPC	-55°C to +60°C
LLC FO Rx 4G-2	LC/APC	-55°C to +60°C
LLC FO Rx 4G-3	FC/UPC	-55°C to +60°C
LLC FO Rx 4G-4	FC/APC	-55°C to +60°C

FUNCTIONAL DESCRIPTION

Figure 1 **Receiver Block Diagram**

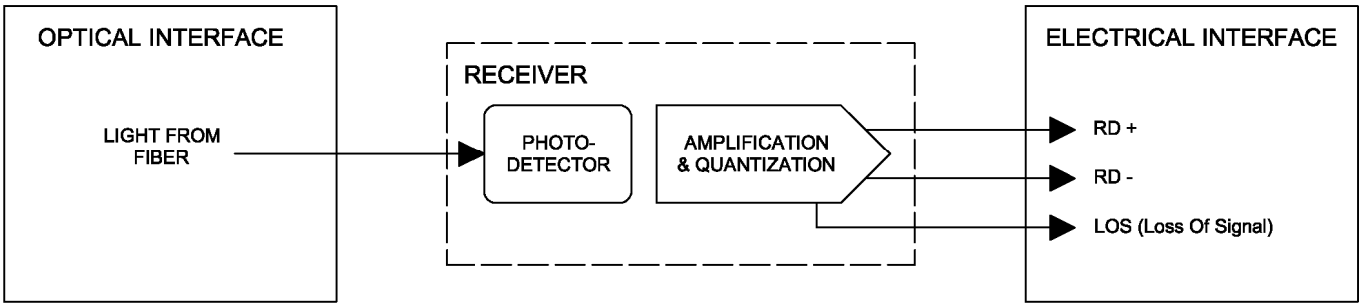
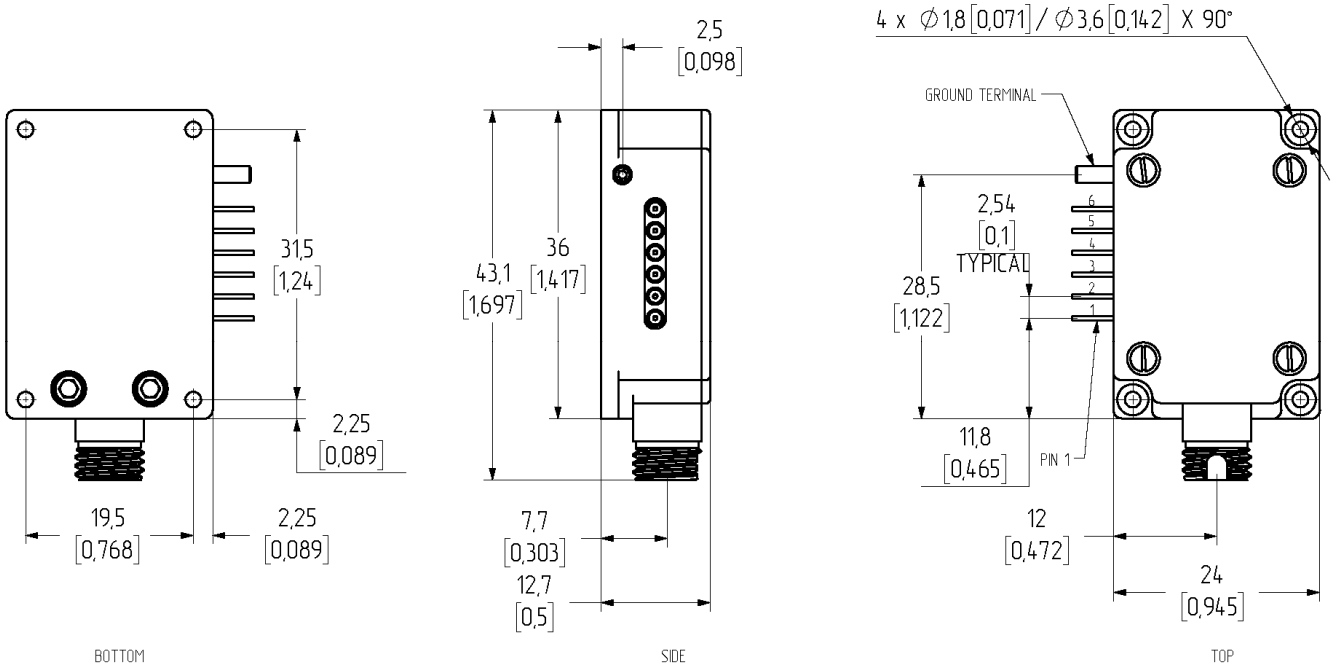
Figure 2 **Receiver Outline Drawing**